THE RANGE

10kVA - 2500kVA

AJ Power

Diesel generating sets worldwide

TUTT BRYANT

POWER PRODUCTS SERVICES

www.tuttbryantpower.com.au

ENGINEERING EXCELLENCE

With more than forty years of expertise in the design and manufacture of diesel generating sets, the AJ Power management team ensures every generating set will provide reliable power and peace of mind. Whether used daily or in an emergency, you can be assured their expert team has created a power solution with you and your needs in mind.

AJ Power headquarters are based at modern facilities in Northern Ireland, UK with subsidiary offices in Sweden and South Africa and regional offices in North and South England, Dubai and Australia. This network of offices enables AJ Power to continue to provide service and support to customers worldwide.

All AJ Power generating sets are made in the UK at their headquarters and since the inception of the company in 2003, over 25,000 generating sets have been designed, manufactured and distributed to over 85 countries worldwide.

All the AJ Power generators up to 7 Series are produced on powered automotive style assembly tracks by skilled operatives prior to load and functional testing in advanced test cells. The largest machines are assembled in an ultra-modern high bay assembly plant with the most advanced testing facilities available for multiple units up to 4000kVA capacity (low or high voltage).

As the company continues to grow so do the services they offer to our customers. AJ Power recently expanded their manufacturing capabilities with a new state of the art factory for large scale fabrication. The new factory houses CNC plasma cutting machines, tandem brakepress, wet paint booth, shot blasting booth, powder coating booth and curing oven, along with new storage facilities for components.

AJ Power is proud of its origins and strives to continue to bring superior products, manufactured in the United Kingdom, to world markets. In 2016 the company was awarded the Queen's Award for Enterprise for International Trade.

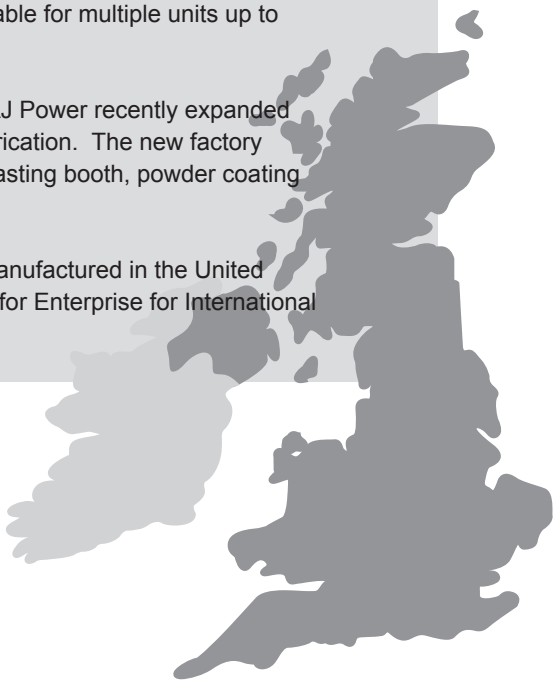

BUILT ON EXPERIENCE

QAS INTERNATIONAL ISO 9001:2015 REGISTERED COMPANY Certificate No. CA12820

QAS INTERNATIONAL ISO 14001:2015 REGISTERED COMPANY Certificate No. EN1651

QAS INTERNATIONAL BS OHSAS 18001: 2007 REGISTERED COMPANY Certificate No. HS1575

THE QUEEN'S AWARDS FOR ENTERPRISE: INTERNATIONAL TRADE 2016

#1 MULTI-BRAND DEALER

For over 80 years, Tutt Bryant has contributed to the growth of Australia's construction, mining and manufacturing industries. From the early introduction of onshore construction equipment manufacturing in Australia, to the procurement of equipment for large scale projects. Tutt Bryant Equipment is the Equipment Sales & After-Sales Support (Parts & Service) division of Tutt Bryant Group. Tutt Bryant Equipment exclusively represents a number of industry leading global brands in Australia.

TUTT BRYANT GROUP

At Tutt Bryant Group we can trace our origins back to 1938, with a name long associated with quality, excellence, professionalism and innovation in the construction and heavy equipment industry. Today we are a diverse construction equipment sales and industrial hire service provider in Australia conducting operations nationally in three principal areas:

- Tutt Bryant Equipment - Sale of power generation, construction plant, equipment and cranes, together with the provision of wear parts, spare parts, equipment service and after-sales support through our nation-wide network.
- Tutt Bryant Heavy Lift and Shift - Hiring of cranes and provision of on-site haulage and specialised transport, jacking and skating, including planning, support and engineering services to meet specific lift and shift requirements.
- Tutt Bryant Hire - Provision of general plant and equipment hire for earthmoving, civil construction, rail maintenance, industrial and trade.

TUTT BRYANT EQUIPMENT

Our industry specific range of equipment includes ***Sumitomo*** and ***Yanmar*** excavators, ***Bomag*** heavy and light compaction equipment, ***Lintec & Linnhoff*** asphalt and concrete mixing plant, ***Metso*** mobile crushing and screen equipment, ***Yanmar*** loaders, ***Okada*** hydraulic hammers and demolition equipment, diesel generator series from ***AJ Power*** and used equipment. We also offer a range of cranes from leading international manufacturers such as ***Kato***, ***HSC Cranes*** and ***SANY***. To ensure the longevity of your equipment, we also offer ***Berco, Elite and Performa*** undercarriages and ***Combi Wear Parts*** (ground engaging tools).

Tutt Bryant Equipment is also proud to welcome ***600 Cranes Australasia*** into our family, adding to our impressive portfolio of quality construction equipment, parts and services. 600 Cranes is the national distributor of ***Fassi*** knuckle boom truck loading and marine cranes, ***Marrel*** hooklifts, ***Jekko*** mini crawler cranes and ***Idrobenne*** grapples and clamshell buckets for cranes.

ENGINES & ALTERNATORS

To ensure world-class quality, our major components such as engines, alternators and steel are all produced or sourced in the United Kingdom, Europe, United States of America or Japan. Investment in class-leading technology and processes ensure that each AJ Power generating set meets or exceeds your expectations, time after time.

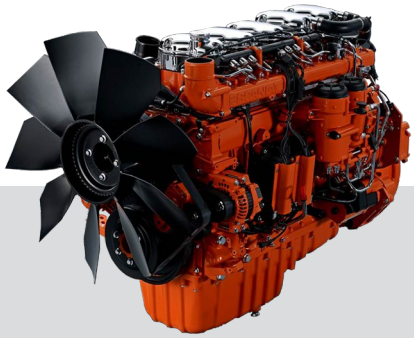

MECC ALTE

Mecc Alte are a world leading producer and supplier of synchronous alternators. As a totally independent company, they are focused fully on producing world class alternators.

MITSUBISHI

Mitsubishi industrial engines have a worldwide reputation for reliability, fuel economy and long life. Their long stroke and low compression design reduces engine stress. Service friendly design reduces maintenance costs and shortens machine downtime.

PERKINS

For over 80 years Perkins have worked with generator set manufacturers to bring light, warmth, protection and of course peace of mind to thousands of people.

SCANIA

The demand for prime power and standby power generation is constantly growing. In either case – wherever there is a critical need for dependable, class-leading fuel efficient workhorses that require a minimum of service and maintenance – the answer is Scania engines for power generation.

SERVICE & MAINTENANCE

AFTER SALES SUPPORT SERVICE

The Tutt Bryant Service network covers more than 23 fixed locations across Australia with emergency field service support on our 1300 658 888 number. Tutt Bryant Equipment have fully equipped service centres to provide fast infield, workshop maintenance and servicing repairs from each of our Capital city locations; Brisbane, Sydney, Melbourne, Adelaide and Perth, as well as a number of regional and urban areas.

FIXED PRICE SERVICING AND MAINTENANCE CONTRACTS

Our diversified team includes skilled engineers, tradespeople and professionals who are fully trained and highly capable across a vast range of applications. From the outset, you will be in the hands of competent and experienced people fully compliant to statutory and industry standards.

Long-term relationships with manufacturers mean that support staff are factory trained and experts in the power generation. Service vehicles are purpose built to ensure that they can do a quality job first time, every time.

FIELD SERVICE AND WORKSHOP MAINTENANCE CONTRACTS

Service and maintenance contracts are offered and can be structured to each customer's requirements. Flat rate and fixed price contract servicing is your guarantee of cost per hour budget and quality equipment maintenance.
These contracts can be included for any of Tutt Bryant Equipment's plant equipment for sale, or at any time after sale.

FACTORY TRAINED TECHNICIANS

Tutt Bryant Equipment's technicians are trained locally and internationally by our original equipment manufacturing partners ensuring a high level of skills, with up to date knowledge on how to best service, maintain and repair our range of plant and earthmoving equipment.

3 SERIES

Power:
10kVA - 66kVA

Overview:
Our smallest range offering you desirable power in a compact package.

Sectors Served:
Telecommunications, Construction, Residential, Retail.

5 SERIES

Power:
33kVA - 275kVA

Overview:
Setting standards for others to follow. Two engine choices complete with full array of additional options.

Sectors Served:
Construction, Residential, Agriculture, Industrial, Commercial.

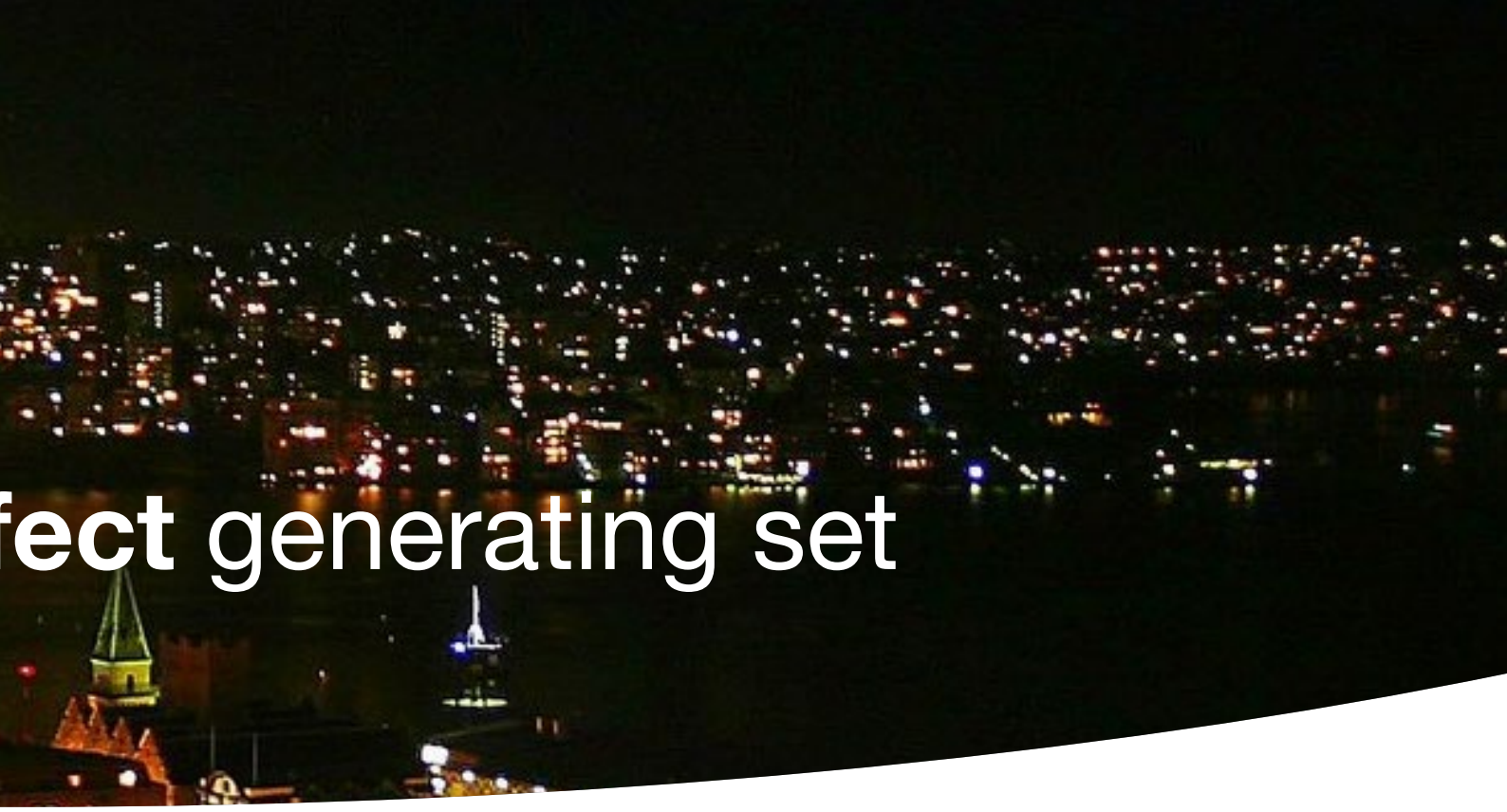

fect generating set

7 SERIES

Power:
280kVA - 937kVA

Overview:
A popular range including models to meet stringent emissions legislation.

Sectors Served:
Industrial, Construction, Mining, Commercial, Events, Utility.

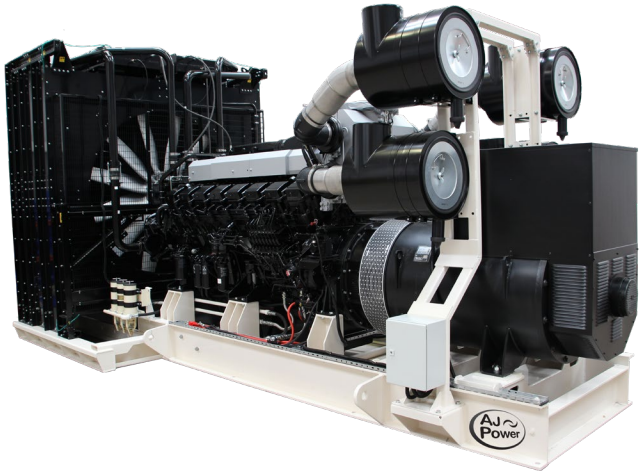

9 SERIES

Power:
800kVA - 2500kVA

Overview:
Our largest generating set range, offering power you can depend on, when it counts.

Sectors Served:
Data Centres, Healthcare, Commercial, Industrial, Banking.

3 SERIES
10 - 66 kVA

The attention to detail and high standards of engineering can be seen immediately in the AJ Power 3 Series.

The smallest range from AJ Power, the 3 Series, offers reliable power in an ultra compact solution. The 3 Series is powered by the world renowned Perkins engines and offers optimum fuel consumption. A range of options are available to tailor your generating set to meet your needs, including optional canopy offering low noise level - perfect for urban locations.

Also available within the 3 Series range is our telecomms generating set, offering an impressive solution for the telecommunications market. Integral high capacity fuel tanks and 500 hour service intervals are just a few of the many features of this model, specifically chosen to serve its purpose.

3 Series

10kVA - 66kVA

DIESEL GENERATING SETS WORLDWIDE

PART NUMBER BREAKDOWN

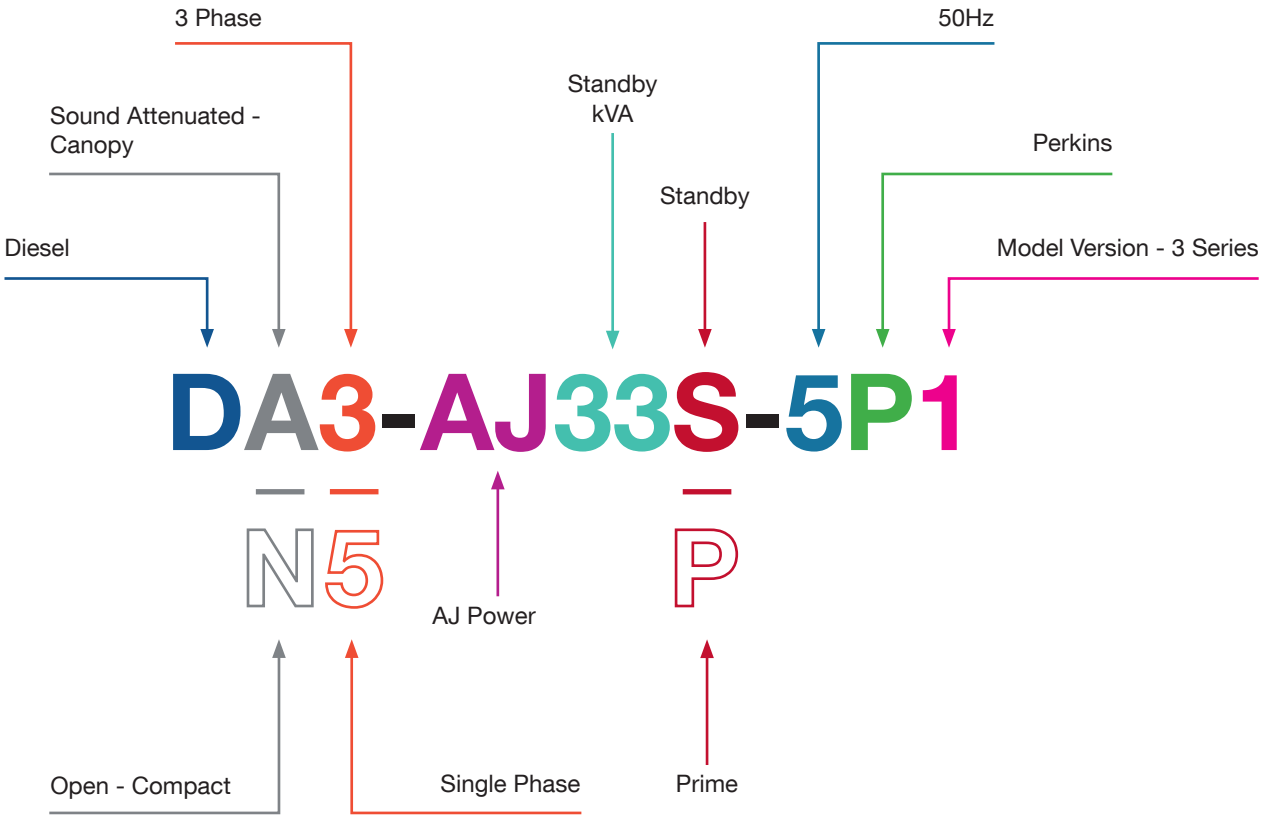

Electrical		Mechanical	
Voltage	380 - 415V	Engine	Perkins
Phases	3	Emissions Rating	Non emissions rated
Frequency	50Hz	Ambient Temp Rating	50 Deg C
Powerfactor	0.8pf	Governor	Mechanical
Alternator	MeccAlte	Moulded Fuel Tank	100 Litres
Controller	InSight3300		

Standard Build Items			
Battery Isolator/Charger	Single Lift Point (SLP)	Jacket Water Heater	4 Pole Circuit Breaker
Emergency Stop Button			

More details: Full product specifications are available on request.

3 SERIES
SPECIFICATIONS

DA3-AJ10S-5P1						
Engine Model	Cylinders	Standby		Prime		Noise @ 1m (75% load, Canopy)
403A-11G1	3	10.0 **kVA**	8.0 **kW**	9.0 **kVA**	7.2 **kW**	72dB
Cubic Capacity (Litre)	Aspiration	Standby Fuel Consumption	Length	Width	Height	Dry Weight
1.1	Naturally	2.9L/Hr	1946mm	720mm	1425mm	452kg

DA3-AJ14S-5P1						
Engine Model	Cylinders	Standby		Prime		Noise @ 1m (75% load, Canopy)
403A-15G1	6	14.3 **kVA**	11.4 **kW**	13.0 **kVA**	10.4 **kW**	70dB
Cubic Capacity (Litre)	Aspiration	Standby Fuel Consumption	Length	Width	Height	Dry Weight
1.5	Naturally	4.1L/Hr	1946mm	720mm	1425mm	522kg

DA3-AJ17S-5P1						
Engine Model	Cylinders	Standby		Prime		Noise @ 1m (75% load, Canopy)
403A-15G2	3	16.5 **kVA**	13.2 **kW**	15.0 **kVA**	12.0 **kW**	71dB
Cubic Capacity (Litre)	Aspiration	Standby Fuel Consumption	Length	Width	Height	Dry Weight
1.5	Naturally	5.0L/Hr	1946mm	720mm	1425mm	522kg

DA3-AJ22S-5P1						
Engine Model	Cylinders	Standby		Prime		Noise @ 1m (75% load, Canopy)
404A-22G1	3	22.0 **kVA**	17.6 **kW**	20.0 **kVA**	16.0 **kW**	73dB
Cubic Capacity (Litre)	Aspiration	Standby Fuel Consumption	Length	Width	Height	Dry Weight
2.2	Naturally	6.1L/Hr	1946mm	720mm	1425mm	572kg

Diesel generating sets worldwide

DA3-AJ33S-5P2						
Engine Model	Cylinders	Standby		Prime		Noise @ 1m (75% load, Canopy)
1103A-33G	3	33.0 **kVA**	26.4 **kW**	30.0 **kVA**	24.0 **kW**	77.5dB
Cubic Capacity (Litre)	Aspiration	Standby Fuel Consumption	Length	Width	Height	Dry Weight
3.3	Naturally	8.1L/Hr	2275mm	975mm	1610mm	939kg

DA3-AJ50S-5P2						
Engine Model	Cylinders	Standby		Prime		Noise @ 1m (75% load, Canopy)
1103A-33TG1	3	50.0 **kVA**	40.0 **kW**	45.0 **kVA**	36.0 **kW**	75.3dB
Cubic Capacity (Litre)	Aspiration	Standby Fuel Consumption	Length	Width	Height	Dry Weight
3.3	Turbocharged	11.70L/Hr	2275mm	975mm	1610mm	1037kg

DA3-AJ66S-5P2						
Engine Model	Cylinders	Standby		Prime		Noise @ 1m (75% load, Canopy)
1103A-33TG2	3	66.0 **kVA**	52.8 **kW**	60.0 **kVA**	48.0 **kW**	77.4dB
Cubic Capacity (Litre)	Aspiration	Standby Fuel Consumption	Length	Width	Height	Dry Weight
3.3	Turbocharged	15.90L/Hr	2275mm	975mm	1610mm	1128kg

More details: Full product specifications are available on request.

5 SERIES
33 - 275 kVA

The 5 Series range from AJ Power - setting standards for others to follow.

The 5 Series from AJ Power delivers exceptional performance, reliability, durability and low operating costs.

All models within the range are available in both open and sound attenuated versions, complete with a full array of optional extras to match your requirements.

Powered by the class-leading Perkins engines, the 5 Series offers excellent fuel consumption and is well equipped to deal with even the most arduous of conditions.

5 Series

33kVA - 275kVA

DIESEL GENERATING SETS WORLDWIDE

PART NUMBER BREAKDOWN

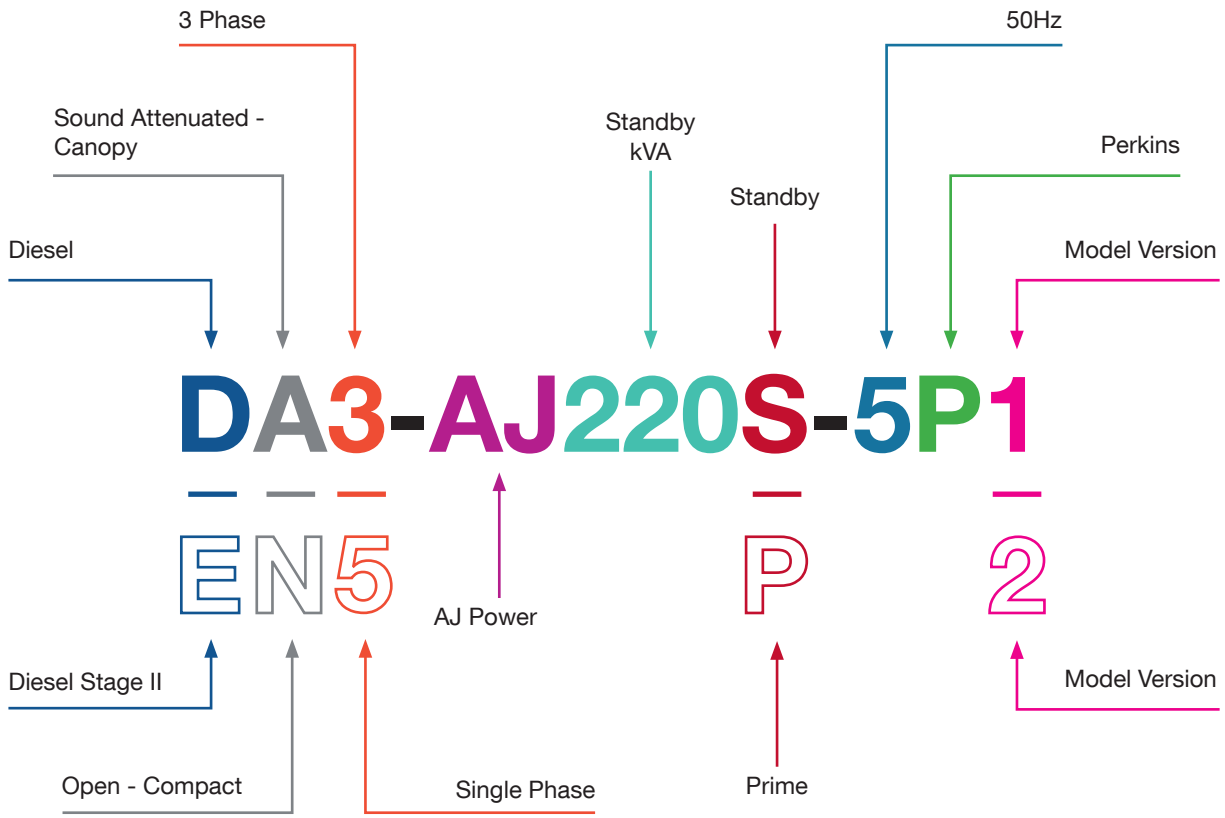

Electrical		Mechanical	
Voltage	380 - 415V	Engine	Perkins
Phases	3	Emissions Rating	Non emissions rated
Frequency	50Hz	Ambient Temp Rating	50 Deg C
Powerfactor	0.8pf	Governor	Mechanical/Electronic
Alternator	MeccAlte		
Controller	InSight3300		

Standard Build Items				
Battery Isolator/Charger	Single Lift Point (SLP)	Jacket Water Heater	4 Pole Circuit Breaker	Bunded Fuel Tank
Emergency Stop Button				

More details: Full product specifications are available on request.

5 SERIES
SPECIFICATIONS

DA3-AJ33S-5P1						
Engine Model	Cylinders	Standby		Prime		Noise @ 1m (75% load, Canopy)
1103A-33G	3	33.0 **kVA**	26.4 **kW**	30.0 **kVA**	24.0 **kW**	73.4dB
Cubic Capacity (Litre)	Aspiration	Standby Fuel Consumption	Length	Width	Height	Dry Weight
3.3	Naturally	8.1L/Hr	2385mm	1100mm	1767mm	1241kg

DA3-AJ50S-5P1						
Engine Model	Cylinders	Standby		Prime		Noise @ 1m (75% load, Canopy)
1103A-33TG1	3	50.0 **kVA**	40.0 **kW**	45.0 **kVA**	36.0 **kW**	71.8dB
Cubic Capacity (Litre)	Aspiration	Standby Fuel Consumption	Length	Width	Height	Dry Weight
3.3	Turbocharged	11.70L/Hr	2385mm	1100mm	1767mm	1359kg

DA3-AJ66S-5P1						
Engine Model	Cylinders	Standby		Prime		Noise @ 1m (75% load, Canopy)
1103A-33TG2	3	66.0 **kVA**	52.8 **kW**	60.0 **kVA**	48.0 **kW**	71.0dB
Cubic Capacity (Litre)	Aspiration	Standby Fuel Consumption	Length	Width	Height	Dry Weight
3.3	Turbocharged	15.90L/Hr	2385mm	1100mm	1767mm	1383kg

DA3-AJ88S-5P1						
Engine Model	Cylinders	Standby		Prime		Noise @ 1m (75% load, Canopy)
1104A-44TG2	4	88.0 **kVA**	70.4 **kW**	80.0 **kVA**	64.0 **kW**	75.2dB
Cubic Capacity (Litre)	Aspiration	Standby Fuel Consumption	Length	Width	Height	Dry Weight
4.4	Turbocharged	20.5L/Hr	2660mm	1100mm	1792mm	1639kg

EA3-AJ110S-5P1						
Engine Model	Cylinders	Standby		Prime		Noise @ 1m (75% load, Canopy)
1104C-44TAG2	4	110.0 **kVA**	88.0 **kW**	100.0 **kVA**	80.0 **kW**	78.8dB
Cubic Capacity (Litre)	Aspiration	Standby Fuel Consumption	Length	Width	Height	Dry Weight
4.4	Turbocharged	24.9L/Hr	2660mm	1100mm	1792mm	1666kg

DA3-AJ150S-5P1						
Engine Model	Cylinders	Standby		Prime		Noise @ 1m (75% load, Canopy)
1106A-70TG1	6	150.0 **kVA**	120.0 **kW**	135.0 **kVA**	108.0 **kW**	79.1dB
Cubic Capacity (Litre)	Aspiration	Standby Fuel Consumption	Length	Width	Height	Dry Weight
7	Turbocharged	33.8L/Hr	3698mm	1150mm	1983mm	2196kg

DA3-AJ165S-5P1						
Engine Model	Cylinders	Standby		Prime		Noise @ 1m (75% load, Canopy)
1106A-70TG2	6	165.0 **kVA**	132.0 **kW**	150.0 **kVA**	120.0 **kW**	78.5dB
Cubic Capacity (Litre)	Aspiration	Standby Fuel Consumption	Length	Width	Height	Dry Weight
7	Turbocharged	36.1L/Hr	3698mm	1150mm	1983mm	2210kg

DA3-AJ200S-5P1						
Engine Model	Cylinders	Standby		Prime		Noise @ 1m (75% load, Canopy)
1106A-70TAG3	6	200.0 **kVA**	160.0 **kW**	180.0 **kVA**	144.0 **kW**	78.7dB
Cubic Capacity (Litre)	Aspiration	Standby Fuel Consumption	Length	Width	Height	Dry Weight
7	Turbocharged	45.1L/Hr	3698mm	1150mm	1983mm	2239kg

DA3-AJ220S-5P1						
Engine Model	Cylinders	Standby		Prime		Noise @ 1m (75% load, Canopy)
1106A-70TAG4	6	220.0 **kVA**	176.0 **kW**	200.0 **kVA**	160.0 **kW**	79.4dB
Cubic Capacity (Litre)	Aspiration	Standby Fuel Consumption	Length	Width	Height	Dry Weight
7	Turbocharged	49.4L/Hr	3698mm	1150mm	1983mm	2279kg

DA3-AJ275S-5P3						
Engine Model	Cylinders	Standby		Prime		Noise @ 1m (75% load, Canopy)
1206A-70TTAG3	6	275.0 **kVA**	220.0 kW	250.0 **kVA**	200.0 **kW**	79.9dB
Cubic Capacity (Litre)	Aspiration	Standby Fuel Consumption	Length	Width	Height	Dry Weight
7	Twin Turbo	64.60L/Hr	4445mm	1600mm	2087mm	3975kg

Bunded Fuel Tank Capacity

- 33-110kVA - 220L
- 150-220kVA - 400L
- 275kVA - 1100L

Note: Electronic Governing standard from 110kVA

More details: Full product specifications are available on request.

7 SERIES
280 - 937 kVA

Building the best generating sets in the world is our aim - the 7 Series speaks louder than words.

From whatever angle you look at it, there is no denying the high standards and attention to detail that have been applied to the design of the entire 7 Series range.

Ready to meet the demands of your industry, the 7 Series boasts an array of standard features plus a complete range of additional options.

The 7 Series range is powered by Scania and Perkins engines. These engines offer high performance cooling systems, high uptime, low operational costs and long service intervals - delivering power you can depend on.

7 Series

280kVA - 937kVA

DIESEL GENERATING SETS WORLDWIDE

PART NUMBER BREAKDOWN

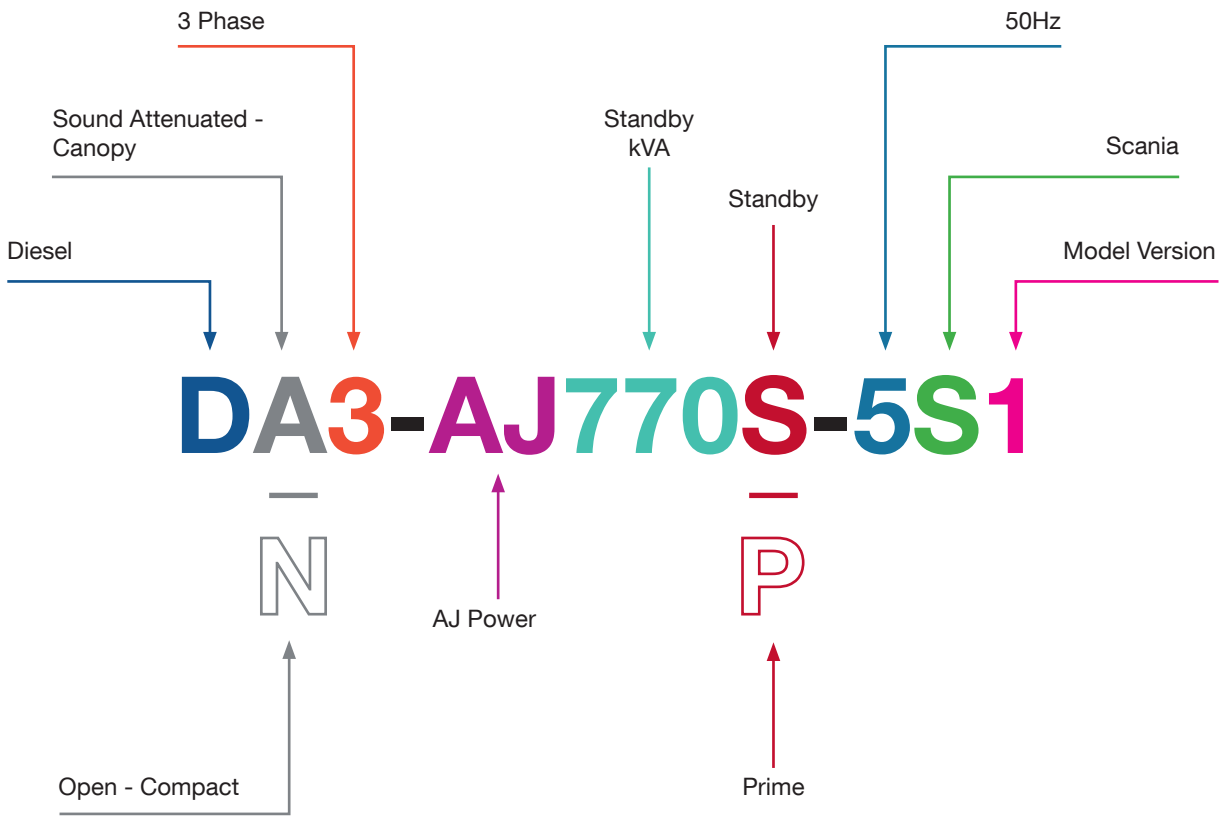

Electrical		Mechanical	
Voltage	380 - 415V	Engine	Scania
Phases	3	Emissions Rating	Non emissions rated
Frequency	50Hz	Ambient Temp Rating	50 Deg C
Powerfactor	0.8pf	Governor	Electronic
Alternator	MeccAlte		
Controller	InSight3300		

Standard Build Items				
Battery Isolator/Charger	Single Lift Point (SLP)	Jacket Water Heater	4 Pole Circuit Breaker	Bunded Fuel Tank
Emergency Stop Button				

More details: Full product specifications are available on request.

7 SERIES
SPECIFICATIONS

DA3-AJ280S-5S1						
Engine Model	Cylinders	Standby		Prime		Noise @ 1m (75% load, Canopy)
DC9 72A	5 in line	280.0 **kVA**	224.0 **kW**	250.0 **kVA**	200.0 **kW**	77.5dB
Cubic Capacity (Litre)	Aspiration	Standby Fuel Consumption	Length	Width	Height	Dry Weight
9.3	Turbocharged	56.30L/Hr	5000mm	1600mm	2100mm	4165kg

DA3-AJ310S-5S1						
Engine Model	Cylinders	Standby		Prime		Noise @ 1m (75% load, Canopy)
DC9 72A	5 in-line	310.0 **kVA**	248.0 **kW**	280.0 **kVA**	224.0 **kW**	78.7dB
Cubic Capacity (Litre)	Aspiration	Standby Fuel Consumption	Length	Width	Height	Dry Weight
9.3	Turbocharged	63.50L/Hr	5000mm	1600mm	2100mm	4250kg

DA3-AJ330S-5S1						
Engine Model	Cylinders	Standby		Prime		Noise @ 1m (75% load, Canopy)
DC9 72A	5 in-line	330.0 **kVA**	264.0 **kW**	300.0 **kVA**	240.0 **kW**	78.7dB
Cubic Capacity (Litre)	Aspiration	Standby Fuel Consumption	Length	Width	Height	Dry Weight
9.3	Turbocharged	68.10L/Hr	5000mm	1600mm	2100mm	4250kg

DA3-AJ360S-5S1						
Engine Model	Cylinders	Standby		Prime		Noise @ 1m (75% load, Canopy)
DC9 72A	5 in line	360.0 **kVA**	288.0 **kW**	330.0 **kVA**	264.0 **kW**	79.0dB
Cubic Capacity (Litre)	Aspiration	Standby Fuel Consumption	Length	Width	Height	Dry Weight
9.3	Turbocharged	73.50L/Hr	5000mm	1600mm	2100mm	4525kg

Diesel generating sets worldwide

7 SERIES

DA3-AJ375S-5S1

Engine Model	Cylinders	Standby		Prime		Noise @ 1m (75% load, Canopy)
DC13 72A	6 in line	375.0 **kVA**	300.0 **kW**	350.0 **kVA**	280.0 **kW**	78.3dB
Cubic Capacity (Litre)	Aspiration	Standby Fuel Consumption	Length	Width	Height	Dry Weight
12.7	Turbocharged	76.65L/Hr	5000mm	1600mm	2100mm	4540kg

DA3-AJ400S-5S1

Engine Model	Cylinders	Standby		Prime		Noise @ 1m (75% load, Canopy)
DC13 72A	6 in line	400.0 **kVA**	320.0 **kW**	370.0 **kVA**	296.0 **kW**	79.5dB
Cubic Capacity (Litre)	Aspiration	Standby Fuel Consumption	Length	Width	Height	Dry Weight
12.7	Turbocharged	76.70L/Hr	5000mm	1600mm	2100mm	4675kg

DA3-AJ440S-5S1

Engine Model	Cylinders	Standby		Prime		Noise @ 1m (75% load, Canopy)
DC13 72A	6 in line	440.0 **kVA**	352.0 **kW**	400.0 **kVA**	320.0 **kW**	79.5dB
Cubic Capacity (Litre)	Aspiration	Standby Fuel Consumption	Length	Width	Height	Dry Weight
12.7	Turbocharged	88.19/Hr	5000mm	1600mm	2100mm	4753kg

DA3-AJ460S-5S1

Engine Model	Cylinders	Standby		Prime		Noise @ 1m (75% load, Canopy)
DC13 72A	6 in line	460.0 **kVA**	368.0 **kW**	410.0 **kVA**	328.0 **kW**	79.5dB
Cubic Capacity (Litre)	Aspiration	Standby Fuel Consumption	Length	Width	Height	Dry Weight
12.7	Turbocharged	88.19/Hr	5000mm	1600mm	2100mm	4675kg

More details: Full product specifications are available on request.

7 SERIES
SPECIFICATIONS

DA3-AJ500S-5S1						
Engine Model	Cylinders	Standby		Prime		Noise @ 1m (75% load, Canopy)
DC13 72A	6 in line	500.0 **kVA**	400.0 **kW**	450.0 **kVA**	360.0 **kW**	79.5dB
Cubic Capacity (Litre)	Aspiration	Standby Fuel Consumption	Length	Width	Height	Dry Weight
12.7	Turbocharged	98.94/Hr	5000mm	1600mm	2100mm	4753kg

DA3-AJ550S-5S1						
Engine Model	Cylinders	Standby		Prime		Noise @ 1m (75% load, Canopy)
DC13 72A	6 in line	550.0 **kVA**	440.0 **kW**	500.0 **kVA**	400.0 **kW**	78.0dB
Cubic Capacity (Litre)	Aspiration	Standby Fuel Consumption	Length	Width	Height	Dry Weight
12.7	Turbocharged	110.68/Hr	5000mm	1600mm	2100mm	4806kg

DA3-AJ615S-5S1						
Engine Model	Cylinders	Standby		Prime		Noise @ 1m (75% load, Canopy)
DC16 093A	8	615.0 **kVA**	492.0 **kW**	560.0 **kVA**	448.0 **kW**	81.70dB
Cubic Capacity (Litre)	Aspiration	Standby Fuel Consumption	Length	Width	Height	Dry Weight
16.4	Turbocharged	122.10L/Hr	5400mm	1750mm	2100mm	5634kg

DA3-AJ670S-5S1						
Engine Model	Cylinders	Standby		Prime		Noise @ 1m (75% load, Canopy)
DC16 093A	8	670.0 **kVA**	536.0 **kW**	610.0 **kVA**	488.0 **kW**	81.70dB
Cubic Capacity (Litre)	Aspiration	Standby Fuel Consumption	Length	Width	Height	Dry Weight
16.4	Turbocharged	135.60L/Hr	5400mm	1750mm	2100mm	5634kg

Diesel generating sets worldwide

DA3-AJ710S-5S1						
Engine Model	Cylinders	Standby		Prime		Noise @ 1m (75% load, Canopy)
DC16 093A	8	710.0 **kVA**	568.0 **kW**	650.0 **kVA**	520.0 **kW**	81.70dB
Cubic Capacity (Litre)	Aspiration	Standby Fuel Consumption	Length	Width	Height	Dry Weight
16.4	Turbocharged	143.03L/Hr	5400mm	1750mm	2100mm	5840kg

DN3-AJ770S-5S1						
Engine Model	Cylinders	Standby		Prime		Noise @ 1m (75% load, Canopy)
DC16 093A	8	770.0 **kVA**	616.0 **kW**	700.0 **kVA**	560.0 **kW**	81.70dB
Cubic Capacity (Litre)	Aspiration	Standby Fuel Consumption	Length	Width	Height	Dry Weight
16.4	Turbocharged	156.80L/Hr	5400mm	1750mm	2100mm	5947kg

Bunded Fuel Tank Capacity

- 280-360kVA - 500L
- 375-550kVA - 880L
- 615-770kVA - 1050L

More details: Full product specifications are available on request.

9 SERIES
800 - 2500 kVA

Years of expertise are poured into every 9 Series generating set to deliver power solutions you can rely on.

The 9 Series is the largest power range from AJ Power. Whether it be low or high voltage (3.3-13.8kV), our engineer's can come up with a solution.

The 9 Series comes in open set versions or can be supplied with bespoke containers.

A wide range of technical additional options are available on these generating sets to ensure the ultimate solution.

Offering a choice of Perkins or Mitsubishi engines, the 9 Series can meet the demands of all your critical power requirements.

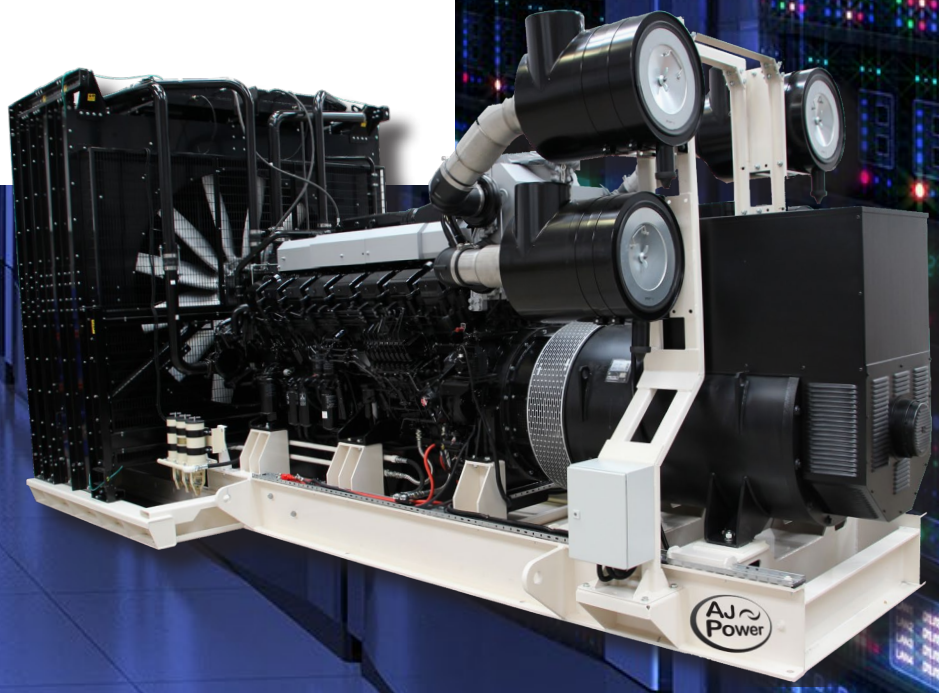

9 Series

800kVA - 2500kVA

DIESEL GENERATING SETS WORLDWIDE

PART NUMBER BREAKDOWN

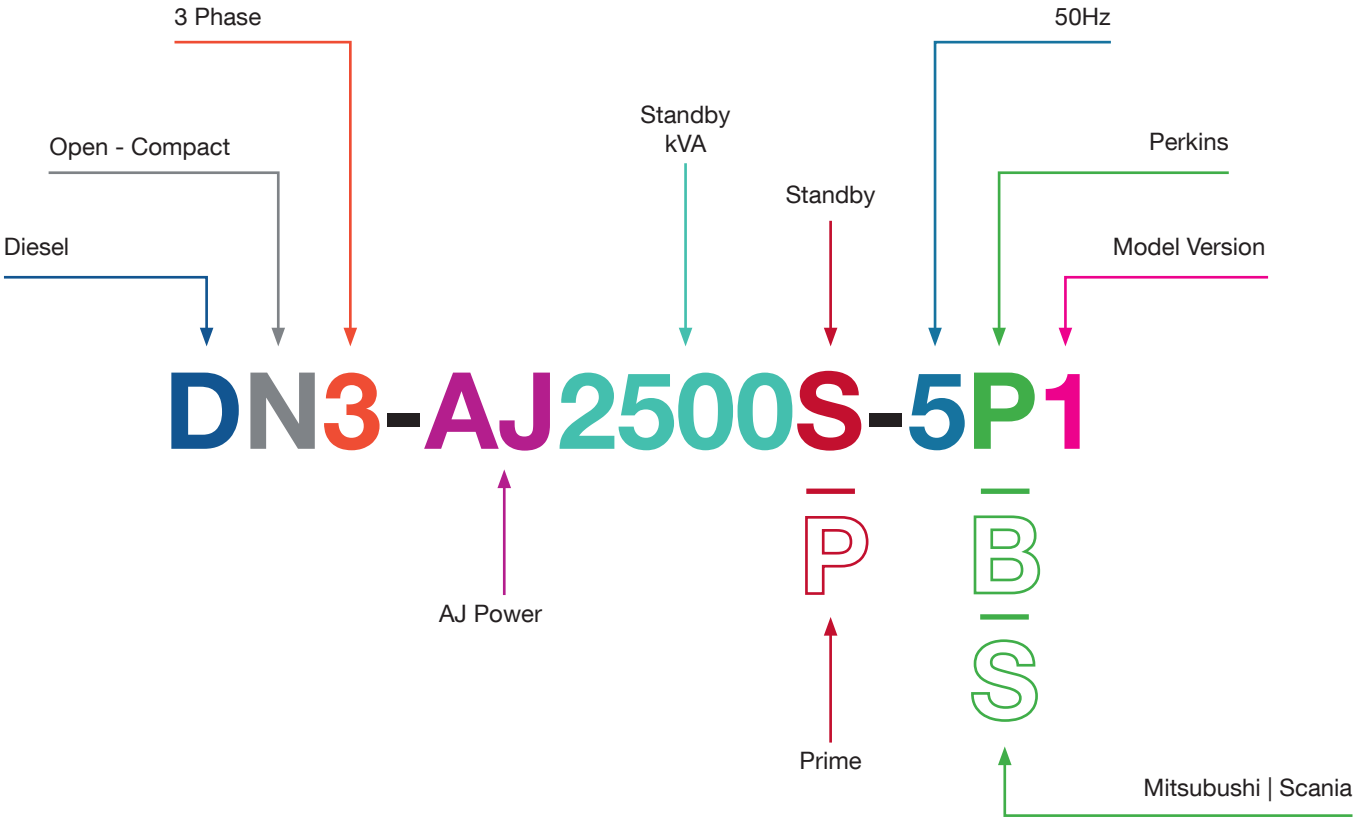

Electrical		Mechanical	
Voltage	380 - 415V	Engine	Mitsubishi/Perkins/Scania
Phases	3	Emissions Rating	Non emissions rated
Frequency	50Hz	Ambient Temp Rating	50 Deg C
Powerfactor	0.8pf	Governor	Electronic
Alternator	MeccAlte		
Controller	InSight3300		

Standard Build Items			
Battery Isolator	Battery Charger	Jacket Water Heater	4 Pole Circuit Breaker
3 Phase AVR	Permanent Magnet Generator		Anti Condensation Heater
Emergency Stop Button			

More details: Full product specifications are available on request.

9 SERIES
SPECIFICATIONS

DN3-AJ800S-5P1						
Engine Brand	Engine Model	Cylinders	Standby		Prime	
Perkins	4006-23TAG2A	6 in-line	800.0 **kVA**	640.0 **kW**	730.0 **kVA**	584.0 **kW**
Cubic Capacity (Litre)	Aspiration	Standby Fuel Consumption	Length	Width	Height	Dry Weight
22.9	Turbocharged	176L/Hr	4164mm	1933mm	2274mm	6425kg

DN3-AJ900S-5P1						
Engine Brand	Engine Model	Cylinders	Standby		Prime	
Perkins	4006-23TAG2A	6 in-line	900.0 **kVA**	720.0 **kW**	800.0 **kVA**	640.0 **kW**
Cubic Capacity (Litre)	Aspiration	Standby Fuel Consumption	Length	Width	Height	Dry Weight
22.9	Turbocharged	197.24L/Hr	4164mm	1933mm	2274mm	6645kg

DN3-AJ1000S-5P1						
Engine Brand	Engine Model	Cylinders	Standby		Prime	
Perkins	4008-TAG1A	8 in-line	1000.0 **kVA**	800.0 **kW**	910.0 **kVA**	728.0 **kW**
Cubic Capacity (Litre)	Aspiration	Standby Fuel Consumption	Length	Width	Height	Dry Weight
30.6	Turbocharged	218.00L/Hr	4505mm	2060mm	2361mm	7176kg

DN3-AJ1250S-5P1						
Engine Brand	Engine Model	Cylinders	Standby		Prime	
Perkins	4008-30TAG3A	8 in-line	1250.0 **kVA**	1000.0 **kW**	1125.0 **kVA**	900.0 **kW**
Cubic Capacity (Litre)	Aspiration	Standby Fuel Consumption	Length	Width	Height	Dry Weight
30.6	Turbocharged	269.00L/Hr	4507mm	2194mm	2109mm	7728kg

DN3-AJ1500S-5P1						
Engine Brand	Engine Model	Cylinders	Standby		Prime	
Perkins	4012-46TAG2A	12	1500.0 **kVA**	1200.0 **kW**	1350.0 **kVA**	1080.0 **kW**
Cubic Capacity (Litre)	Aspiration	Standby Fuel Consumption	Length	Width	Height	Dry Weight
45.8	Turbocharged	318.00L/Hr	4748mm	2126mm	2448mm	9270kg

Diesel generating sets worldwide

DN3-AJ1770S-5P1						
Engine Brand	Engine Model	Cylinders	Standby		Prime	
Perkins	4012-46TAG2A	12	1770.0 **kVA**	1416.0 **kW**	1650.0 **kVA**	1320.0 **kW**
Cubic Capacity (Litre)	Aspiration	Standby Fuel Consumption	Length	Width	Height	Dry Weight
45.8	Turbocharged	380.28L/Hr	4874mm	4874mm	2838mm	10850kg

DN3-AJ2000S-5P1						
Engine Brand	Engine Model	Cylinders	Standby		Prime	
Perkins	4016-61TRG1	16	2000.0 **kVA**	1600.0 **kW**	1800.0 **kVA**	1400.0 **kW**
Cubic Capacity (Litre)	Aspiration	Standby Fuel Consumption	Length	Width	Height	Dry Weight
61.1	Turbocharged	401.00L/Hr	5726mm	2184mm	2550mm	12263kg

DN3-AJ2200S-5P1						
Engine Brand	Engine Model	Cylinders	Standby		Prime	
Perkins	4016-61TRG2	16	2200.0 **kVA**	1750.0 **kW**	2000.0 **kVA**	1600.0 **kW**
Cubic Capacity (Litre)	Aspiration	Standby Fuel Consumption	Length	Width	Height	Dry Weight
61.1	Turbocharged	463L/Hr	5726mm	2184mm	2550mm	12263kg

DN3-AJ2530S-5B1						
Engine Brand	Engine Model	Cylinders	Standby		Prime	
Mitsubishi	S16R2 PTAW	16	2530.0 **kVA**	2024.0 **kW**	2300.0 **kVA**	1840.0 **kW**
Cubic Capacity (Litre)	Aspiration	Standby Fuel Consumption	Length	Width	Height	Dry Weight
79.9	Turbocharged	525.15L/Hr	5955mm	2390mm	3187mm	16525kg

More details: Full product specifications are available on request.

SOUND ATTENUATED ENCLOSURES

AJ Power's weather protective and sound attenuated enclosures deliver durability and security for your generating set. Manufactured from pre-treated galvanised steel and coated with highly durable polyester powder paint, the canopies are designed with low velocity airflow to minimise the ingress of water, sand and dust. This is extremely advantageous to the operational life of the engine and alternator and will ensure your AJ Power sound attenuated generating set will operate in even the harshest conditions.

Also available are bespoke sound attenuated containers for the entire range of AJ Power generating sets.

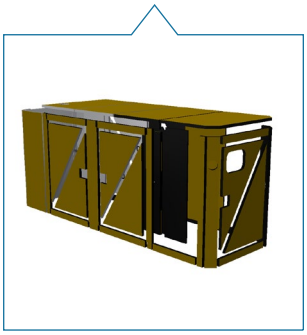

NOISE ABSORBENT MATERIALS

Enclosure is fully lined with noise absorbent material, as standard, to ensure low noise levels.

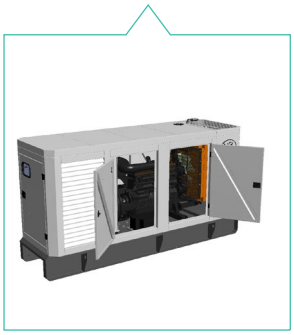

SERVICING MADE EASY

Large hinged doors provide access to all necessary components during installation and servicing. Lift-off hinges also available.

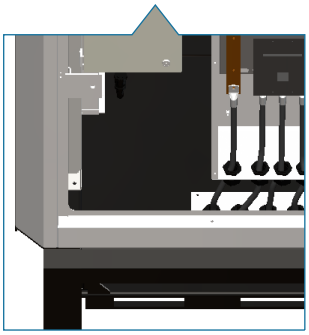

CONVENIENT CABLE ACCESS

Large aperture cable gland plate positioned below circuit breaker for ease of cable installation.

SINGLE POINT LIFT FRAME

Eye hook fitted to the top centre of canopy provides a means of lifting genset and is useful during installation.

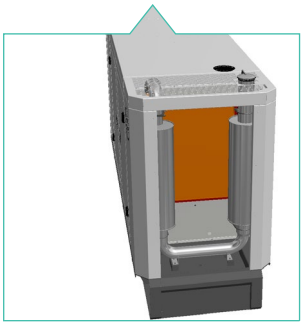

INTERNAL EXHAUST SILENCER SYSTEM

The exhaust silencer system is safely enclosed in the outlet of the enclosure.

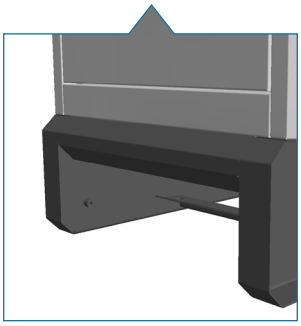

INNOVATIVE DESIGN

Design decisions are evaluated at each stage to ensure a machine has low noise levels, high ambient clearance, low intake velocity whilst having a compact modern style.

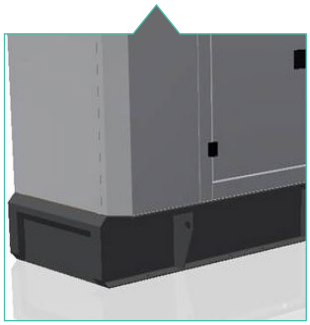

CORROSION & DAMAGE RESISTANT

Fully galvanised steel enclosure coated in highly durable polyester powder paint.

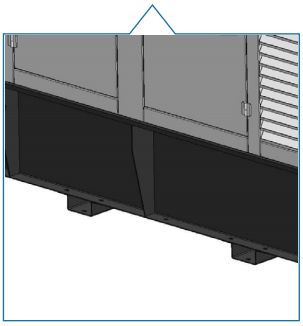

FORK POCKETS

An opening in the base frame for insertion of the prongs of a forklift.

DIGITAL CONTROL SYSTEMS

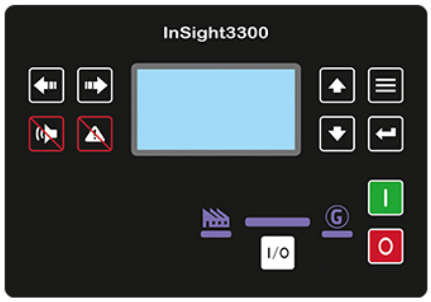

Operation made easy using the most up-to-date control systems.

AJ Power can provide a control system to meet all your needs. The modern range of digital control systems offers flexibility for the user, ease of use and optimises the performance of your generating set.

InSight3200 - automatic digital control panel with simple universal icon display.

InSight3300 - manual, remote start, liquid crystal display, full instrumentation and optional remote monitoring.

InSight4100 - full automatic mains failure supervision capability, optional remote monitoring.

InSight5200 - comprehensive paralleling of up to 32 generator sets, direct communication via the engine control unit, optional remote monitoring.

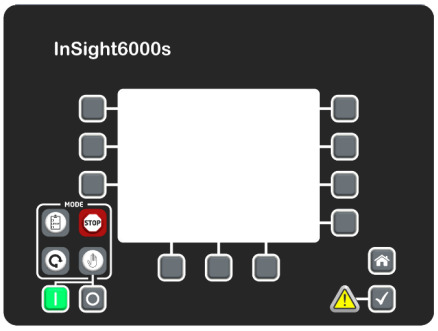

InSight6000S - automatic synchronisation of up to 32 units with load management features, enhanced software and communication interfaces.

ATSc - automatic transfer switch controller to provide automatic control of your standby generating set in the event of a power outage.

More details:
Full product specifications are available on request.

SUPPORT
WHEN YOU NEED IT

AJ Power and their extensive network of distributors are committed to finding the right product for you and supporting you with the best service, parts, training and commissioning, when you need it. They are always ready to go the extra mile to support your purchase.

We can offer tailored generating set training courses from basic to advanced level. These are available on location, online or within one of our training facilities.

One of the key criteria for all our customers is the availability of parts. We recognise this and invest resources to make sure the correct parts are available in the shortest time. We also spend time training our customers and their engineers to ensure they fully understand their parts requirements. We are committed to keeping your machines running.

SPECIFICATIONS

●	Standard
○	Optional
-	Not available/ Not applicable
RTF	Refer to Factory

The AJ Power range of generating sets are packed with standard features including robust base frame, low lube oil pressure shutdown, over speed protection, high coolant temperature shutdown, low battery voltage alarm, battery charging system failure, industrial silencer (optional extra on 9 Series), 4 pole suitably rated circuit breaker (optional extra on 9 Series), fuel tank level gauge, emergency stop push button, base fuel tank (not applicable to 9 Series). Also available is a complete array of optional extras to ensure your AJ Power generating sets meet your needs entirely.

	3 Series	5 Series	7 Series	9 Series
Control System				
InSight3200	○	○	○	○
InSight3300	●	●	●	●
InSight4100	○	○	○	○
InSight5200	-	○	○	○
InSight6000S	-	○	○	○
Control panel heater	-	○	○	○
Programming Kit (3200/3250/4000)	○	○	○	○
G59 / G10 main protection relay	-	○	○	○
Remote display panel (3200/3250/4000/6000)	○	○	○	○
Protection alarms (various)	○	○	○	○
Communications				
Volt free contacts	○	○	○	○
GSM modem kit				
Remote communications solution	○	○	○	○
Automatic load transfer panels				
ATS (40 Amp - 6300 Amp)	○	○	○	○
Sound attenuated enclosure	○	○	○	○
Engine				
Electronic governor	-	○	●	●
Coolant drain	-	-	●	●
Coolant heater	○	○	○	○
Lube oil drain (standard on canopied sets)	○	○	●	●
Lube oil drain pump	○	○	○	○
Approaching low lube oil pressure alarm	○	○	○	-
High lube oil temperature shutdown	-	-	-	○
Alternator				
Anti- condensation heater	○	○	○	●
Permanent magnet generator (PMG)	-	○	○	○
Programming interface kit	○	○	○	○
Radio frequency interference suppression kit (RFI)	●	●	●	●
Upgrade AVR from 1-phase to 3-phase sensing	-	○	○	●
Total plus winding protection	○	○	○	○
IP23 protection	●	●	●	●

Please Note: Some options dependant on open/ canopied generating set and are model dependant.

	3 Series	5 Series	7 Series	9 Series
Radiator				
Transition mounting flange*	-	○	○	○
Flexible transition duct*	-	○	○	○
Sound attenuator*	-	○	○	○
Weather louvre*	-	○	○	○
* open sets only				
Standard coolant solution (30% antifreeze)	●	●	●	●
Low ambient coolant solution (50% antifreeze)	○	○	○	○
Low coolant temperature alarm	-	-	○	○
Approaching high coolant temperature alarm	○	○	○	○
Low coolant level alarm	-	○	○	○
Baseframe / Handling				
Bunded fuel base tank	○	●	●	RTF
Bunded base tank with leak detection	-	○	○	RTF
Integral single skinned tank (600, 1000, 1300 litres - canopied sets only)	●	-	-	-
Extended bunded metal base tank	-	○	-	-
Single point lift (canopied sets only)	●	●	●	-
Captive anti-vibration mounts (required for trailer sets)	○	○	○	-
Fuel				
Base tank	● (100 litres)	●	●	RTF
Fuel tank level gauge	●	●	●	RTF
Fire valve kit	-	○	○	RTF
Low fuel level alarm	○	○	○	RTF
Analogue fuel level measurement	○	○	○	RTF
4 Position fuel level switch	○	○	○	RTF
3 Way dual valve with single lever operation	○	○	○	RTF
Manual fuel transfer pump & hose	-	○	○	RTF
Automatic fuel transfer system	-	○	○	RTF
Exhaust				
Industrial silencer mounting kit	○	○	○	○
Residential silencer (loose) standard on canopy sets	○	○	○	○
Residential silencer mounting kit	○	○	○	○
Stainless steel bellows (standard on canopy sets)	○	○	○	●
AC Power Out (3 Phase)				
Upgrade to 4 pole circuit breaker	●	●	●	●
Auxiliary contact in circuit breaker	○	○	○	○
16A/32A/63A CEE Form Socket - 50Hz only	○	○	RTF	-
Motorised kit for circuit breaker	-	○	○	○
Earth leakage protection for main circuit breaker	○	○	○	○
Battery				
Battery isolator switch	●	●	●	●
Static battery charger incl. BC failure	●	●	●	●
Static battery charger incl. BC failure & boost	○	○	○	○
Other Accessories				
Road Trailer (canopied sets only)	○	○	-	-
Sound attenuated container	○	○	○	○
Tool kit	○	○	○	○
Packing case (open set)	○	○	-	-
CE certification	○	○	○	○
Additional operators manual	○	○	○	○

POWER DISTRIBUTION
Socket Outlets

- Mountable Powerboard or hard mounted configuration
- Customized or Standard configuration
- AS/NZS61439.4 Compliant
- IP66 rated – for tough Australian conditions
- Powerlock terminals available
- Main MCB included
- Individual circuit protection

Rental Specification

50A Mounted Power Board
Suitable for Generators 10kVA to 33kVA (3 phase)
1 x 32A, 5 pin, switched socket outlet
2 x 15A, 3 pin, auto switched outlet
Total module capacity – 4
50A - 80A Mounted Power Board
Suitable for Generators 50kVA to 66kVA (3 phase)
2 x 32A, 5 pin, switched socket outlet
4 x 15A, 3 pin, auto switched outlet
Total module capacity - 8
125A Mounted Power Board
Suitable for Generators 66kVA to 88kVA (3 phase)
3 x 32A, 5 pin, switched socket outlet
4 x 15A, 3 pin, auto switched outlet
Total module capacity – 12
Includes Thermal Management System

Commercial Applications

50A - 80A Hard Mounted Configurations
Suitable for Generators 10kVA to 66kVA (3 phase)
1 x 50A, 5 pin, switched socket outlet
2 x 15A, 3 pin, auto switched outlet
100A Hard Mounted Configurations
Suitable for Generators 66kVA to 88kVA (3 phase)
3 x 50A, 5 pin, switched socket outlet
1 x 20A, 3 pin switched socket outlet
2 x 15A, 3 pin, auto switched outlet

GENERATOR Selection Guide

TUTT BRYANT

Industry _____

Application:	Standby	Prime	Continuous	Mission Critical
Expected usage per year	• 500 Hours	• Unlimited	• Unlimited	• 500 Hours
Average Power Output	• 70%	• 70%	• 70-100%	• 85%
Load Type	• Varying load	• Varying load	• Non-varying	• Varying

Operation	Single Generator	Parallel Generators	Grid Synchronised	
Voltage	240V Single Phase	415V 3 Phase	11KV High Voltage	
Frequency	50Hz			
Fuel	Diesel	Gas	Bio Fuel	
Maximum Ambient Temperature		DegC		
Minimum Ambient Temperature		DegC		
Arrangement	Canopy Enclosure	Open Skid		
Fuel Tank	Skid Base, no fuel tank	Bunded Fuel Tank	Single Skin Fuel Tank	Remote Fuel Tank
Run hours (fuel tank size)		Hours		
Noise Rating		dB(A) @ 1m		
		dB(A) @ 7m		
Expansion Capacity		%		
Connection	Hardwired	Other		

240V Socket Outlets	**Qty**
10A	
15A	
20A	
32A	

415V Socket Outlets	**Qty**
10A	
16A	
20A	
32A	
40A	
50A	

AJ Power
Diesel generating sets worldwide

QUALITY ASSURANCE

GOVERNANCE, RISK MANAGEMENT AND COMPLIANCE

Tutt Bryant has an integrated approach to the areas of Governance, Risk Management and Compliance (GRMC) as it recognises linkages between the three areas, and the often-multiple overlapping and related activities in corporate governance, enterprise risk management, and corporate compliance with applicable laws and regulations.

By adopting an integrated approach to GRMC, Tutt Bryant seeks to ensure that it acts ethically in accordance with its risk appetite, internal policies and external regulators using synergies across strategy, processes, technology, and people. To this extent, Tutt Bryant provides an Integrated Management System (IMS) that shall be followed by all workers, subcontractors and suppliers as the minimum governing compliance requirements when working for or with TBG.

Tutt Bryant operate a Quality Management System, accredited to ISO9001:2015; a Occupational Health And Safety Management System, accredited to ISO45001:2018; and a Environmental Management System, accredited to ISO14001:2015.

WORKPLACE HEALTH AND SAFETY

Tutt Bryant Group Limited (TBG) places the highest value on protecting the health and safety of all our workers. TBG believes that workplace injuries and illness is preventable, and we are committed to aiming for an Incident and Injury Free (IIF) workplace.

ENVIRONMENT

Tutt Bryant Group Limited (TBG) is committed to minimising impacts to the environment and community by managing the activities over which it has control that have the potential to adversely impact upon the environment and community

CERTIFICATE OF REGISTRATION

Tutt Bryant Group Limited

8 Parkview Drive, Olympic Park, NSW 2127, Australia

Has been assessed and certified by Compass Assurance Services to the following management systems, standards and guidelines:

ISO 9001:2015
QUALITY MANAGEMENT SYSTEMS

ISO 45001:2018
OCCUPATIONAL HEALTH AND SAFETY MANAGEMENT SYSTEMS

ISO 14001:2015
ENVIRONMENTAL MANAGEMENT SYSTEMS

The scope of the certification covers the following activities:

Sales, Services, Distribution, Hire and Maintenance of a range of equipment used in Lifting, Access, Materials Handling, Construction, Compaction, Crushing & Screening, Earth Moving, Mining and Road Making and Transport. The company provides these services, along with support facilities, including spare parts support, workshop and onsite repairs and service, overhaul and refurbishment of equipment nationally through its Divisions Tutt Bryant Equipment (TBE), Tutt Bryant Hire, including Garlbagu Tutt Bryant, (TBH) and Tutt Bryant Heavy Lift & Shift (TBHLS)

Managing Director

CERTIFICATION DATE:	DATE OF ISSUE:	EXPIRY DATE:	CERTIFICATE #:
8 March 1996	12 June 2023	13 June 2026	4858-1367-01

COMPASS -ASSURANCE SERVICES-

Compass Assurance Services Pty Ltd
1C, 60 Enterprise Place, Tingalpa, QLD 4173, Australia
1300 495 855 | www.cas.com.au

DOCUMENTATION

Tutt Bryant documentation can be located through our corporate website - www.tuttbryant.com.au/tutt-bryant-group

TUTT BRYANT EQUIPMENT QUALITY GLOBAL PRODUCTS

QUALITY

WE ARE NATIONWIDE

TUTT BRYANT

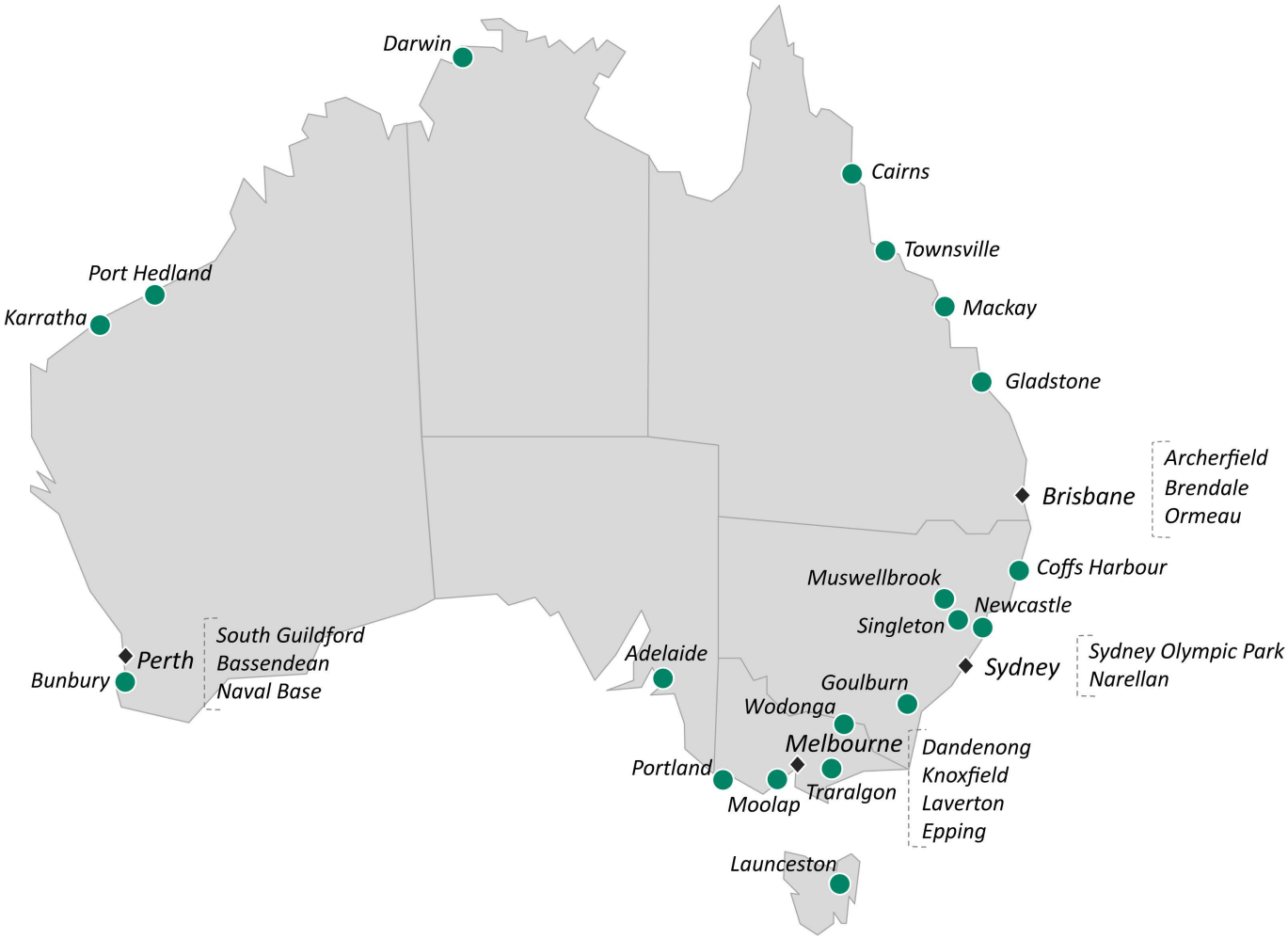

NSW

SYDNEY
23 Grahams Hill Road
Narellan 2567
02 9780 7200

QLD

BRISBANE
539 Boundary Road
Archerfield 4108
07 3373 6400

SA

ADELAIDE
908 Main North Road
Mawson Lakes 5095
08 8162 0900

WA

PERTH
50 Great Eastern Highway
South Guildford 6055
08 9478 0600

BUNBURY
6-10 Hawkins Street
East Bunbury 6230
08 9796 8700

VIC

DANDENONG
80-86 Frankston-Dandenong Road
Dandenong 3175
03 9554 0300

EPPING
1/189 O'Herns Road
Epping 3076
03 9554 0380

1300 658 888
tuttbryantpower.com.au | powergen@tuttbryant.com.au

FOLLOW US ON SOCIAL MEDIA

FOLLOW AJ POWER ON SOCIAL MEDIA

youtube.com/@ajpowerltd8240
facebook.com/ajpowerltd
twitter.com/ajpower
linkedin.com/company/ajpower

©Copyright Tutt Bryant Group Limited
09.2026